[Standard] X-Axis Dovetail Slide, Rack & Pinion

Rectangular, Low Profile

Points on Similar Product Comparison | **Travel Accuracy (Straightness) 50μm**

Similar Product Pages P.1903, 1904

Features: Rapid feed Rack & Pinion stages with less accuracy and more economical prices than existing products.

X-Axis

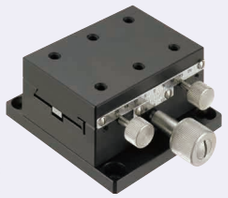

XY-Axis P.1938
Z-Axis P.1953

RoHS10

XDTS50

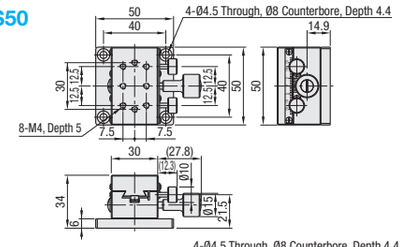

XDTS60

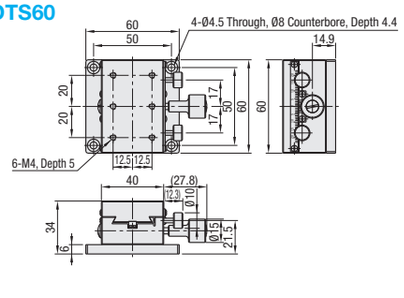

XDTS90

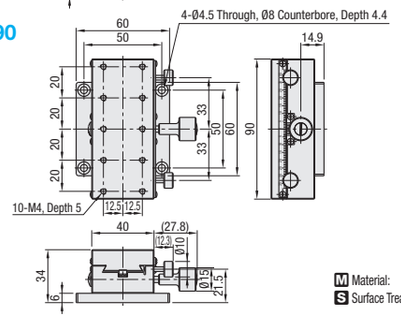

M Material: Aluminum Alloy
S Surface Treatment: Black Anodize

X-Axis Stages

Low Profile Type: XDTSC (P.1903)
High Precision Stage Existing Product: XWG (P.1904)

Part Number Type	No.	Stage Surface (mm)	Travel Distance (mm)	Travel per Rotation (mm)	Load Capacity (N) Horizontal	Load Capacity (N) Vertical	Max. Holding Force (N) (Ref.)	Travel Accuracy Straightness	Weight (kg)	Unit Price
XDTS	50	30x50	±16	16.7	29.4	14.7	30	50μm	0.20	
	60	40x60	±21		39.2	19.6	60		0.26	
	90	40x90	±35				70		0.36	

Max. Holding Force (Ref.) will vary depending on the tightening torque variations. Ensure adequate safety margins for design. Resolution (Vernier Scale Indication): 0.1mm/division
Knob Cover HDCVR15 (Sold Separately): Ø15 knobs can be increased in diameter by installing the cover. P.2004

Ordering Example | Part Number: XDTS60

Features: Rapid Feed Rack & Pinion Stages with Low Profile. Stage thickness except the bottom plate is 20mm.

X-Axis Low Profile

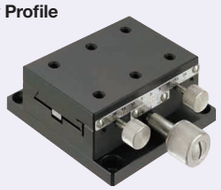

XY-Axis P.1938
Z-Axis P.1953

RoHS10

XDTSC50

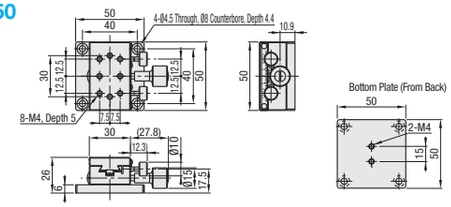

XDTSC60

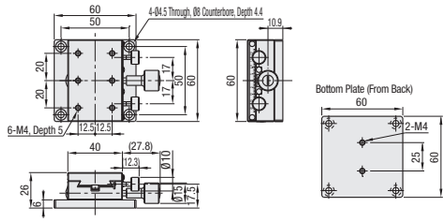

XDTSC90

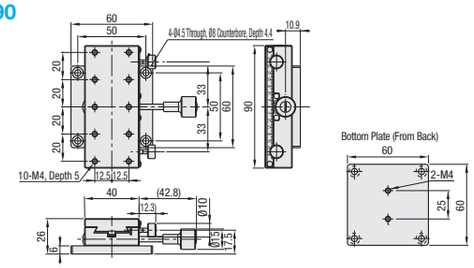

See the CAD data for details.
Please note that the mounting plate and the feed knob may interfere when the bottom plate is removed for use.

M Material: Aluminum Alloy
S Surface Treatment: Black Anodize

X-Axis Stages

Standard Type: XDTS (P.1903)

Part Number Type	No.	Stage Surface (mm)	Travel Distance (mm)	Travel per Rotation (mm)	Load Capacity (N) Horizontal	Load Capacity (N) Vertical	Max. Holding Force (N) (Ref.)	Travel Accuracy Straightness	Weight (kg)	Unit Price
XDTSC	50	50x30	±15	16.7	19.6	9.8	10	50μm	0.17	
	60	60x40	±20		29.4	14.7	20		0.21	
	90	90x40	±35				40		0.28	

Max. Holding Force (Ref.) will vary depending on the tightening torque variations. Ensure adequate safety margins for design. Resolution (Vernier Scale Indication): 0.1mm/division
Knob Cover HDCVR15 (Sold Separately): Dovetail Stage Ø15 knobs can be increased in diameter by installing the cover. P.2004

Ordering Example | Part Number: XDTSC60

[High Precision] X-Axis Dovetail Slide, Rack & Pinion

Rectangular, Compact Carriage

Features: Dovetail slide stages with 18mm travel per knob rotation. Rectangular form factor contributes to space saving designs. (XFG on P.1911)

X-Axis, Rectangular

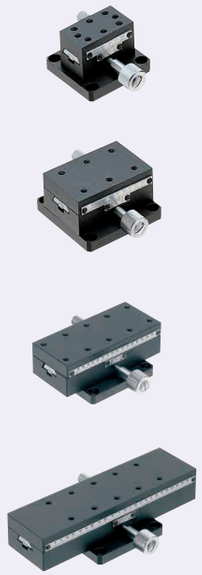

XY-Axis P.1939
Z-Axis P.1954

RoHS10

XWG40

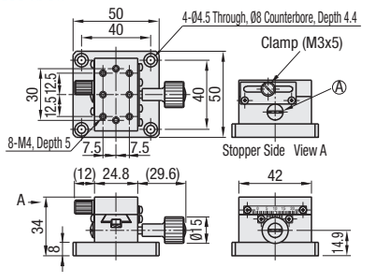

XWG60

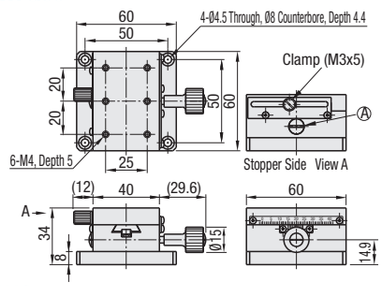

XWG90

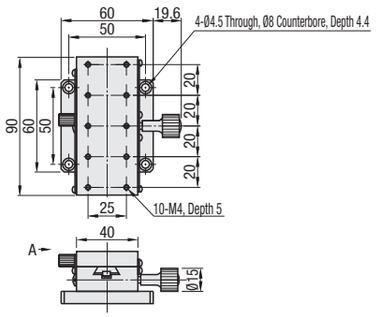

XWG140

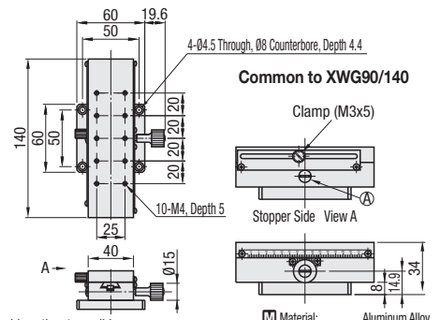

* By turning the preload adjustment screw Ⓐ clockwise with a flathead screwdriver, the stage slides slowly, and by turning counterclockwise the stage slides quickly and smoothly.

M Material: Aluminum Alloy
S Surface Treatment: Black Anodize

Standard Stages Similar Products: XDTS (P. 1903) Long Stroke: XLWG (P. 1908), XLONG (P. 1909), XLARGE (P. 1910)

Part Number Type	No.	Stage Surface (mm)	Travel Distance (mm)	Travel per Rotation (mm)	Load Capacity (N) Horizontal	Load Capacity (N) Vertical	Travel Accuracy Straightness	Weight (kg)	Unit Price
XWG	40	24.8x42	±12	18	29.4	14.7	30μm	0.17	
	60	40x60	±21		39.2	19.6		0.29	
	90	40x90	±35					0.40	
	140	40x140	±60					0.56	

Resolution (Vernier Scale Indication): 0.1mm/division
Knob Cover HDCVR15 (Sold Separately): Ø15 knobs can be increased in diameter by installing the cover. P.2004

Ordering Example | Part Number: XWG40

Features: Compact Dovetail Slide Rack and Pinion Stages (width: 24.8mm) with 18mm travel per knob rotation.

X-Axis, Compact Carriage

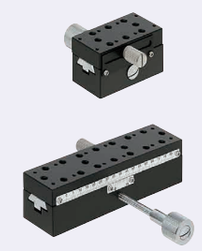

RoHS10

XSP

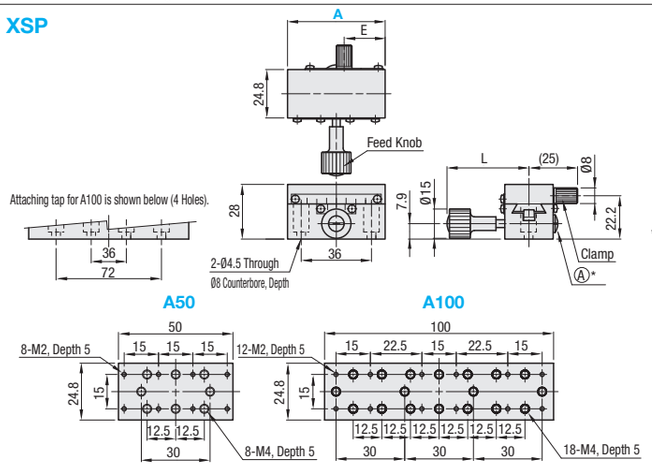

* By turning the preload adjustment screw Ⓐ clockwise with a flathead screwdriver, the stage slides slowly, and by turning counterclockwise the stage slides quickly and smoothly.

M Material: Aluminum Alloy
S Surface Treatment: Black Anodize

Part Number Type	A	Stage Surface (mm)	Travel Distance (mm)	Travel per Rotation (mm)	L	E	Load Capacity (N) Horizontal	Load Capacity (N) Vertical	Travel Accuracy Straightness	Weight (kg)	Accessory (2 pcs.) Type M-L	Unit Price
XSP	50	50x24.8	±16	18	42	21	29.4	14.7	30μm	0.13	SCB4-8	
	100	100x24.8	±40		63	46	39.2	19.6		0.24		

Resolution (Vernier Scale Indication): 0.1mm/division
Knob Cover HDCVR15 (Sold Separately): Ø15 knobs can be increased in diameter by installing the cover. P.2004
Adjustable Plate XPLT: Use this plate when connecting stages with non-matching mounting holes. P.1915

Ordering Example | Part Number: XSP100