Toggle Clamps

Hold Down, Vertical Handle (Straight Base)

1N=0.101972kgf

Hold Down, Vertical Handle (Straight Base)

(Clamped)

Part Number	MC04-6S
Body Material	SS400
Surface Treatment	Trivalent Chromate
Tightening Force (N)	294
Weight (g)	40
Arm Open-Close Angle	80°
Handle Open-Close Angle	88°
Accessory	Bolt with Rubber Material: NBR Hardness: Shore A70
Unit Price	

MC04-6S

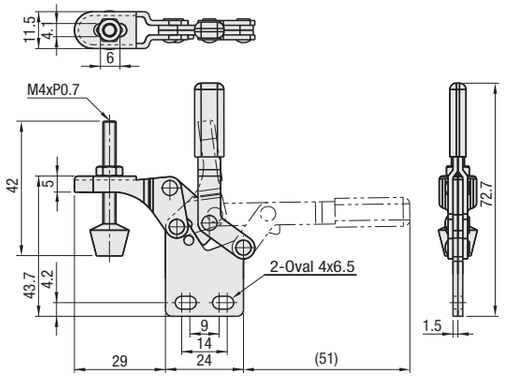

Hold Down, Vertical Handle (Straight Base)

(Clamped)

Part Number	MC04-7S
Body Material	SS400
Surface Treatment	Trivalent Chromate
Tightening Force (N)	980
Weight (g)	200
Arm Open-Close Angle	120°
Handle Open-Close Angle	72°
Accessory	Steel Bolt
Unit Price	

MC04-7S

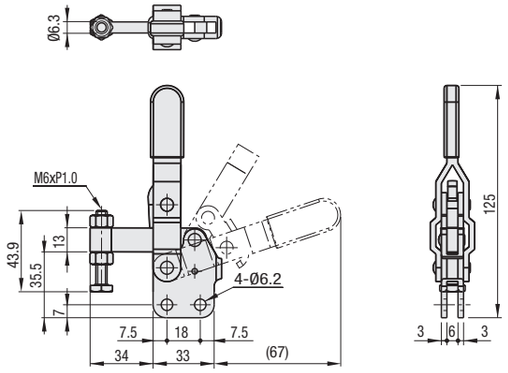

Hold Down, Vertical Handle (Straight Base)

(Clamped)

Part Number	MC04-8S
Body Material	SS400
Surface Treatment	Trivalent Chromate
Tightening Force (N)	1470
Weight (g)	370
Arm Open-Close Angle	94°
Handle Open-Close Angle	54°
Accessory	Steel Bolt
Unit Price	

MC04-8S

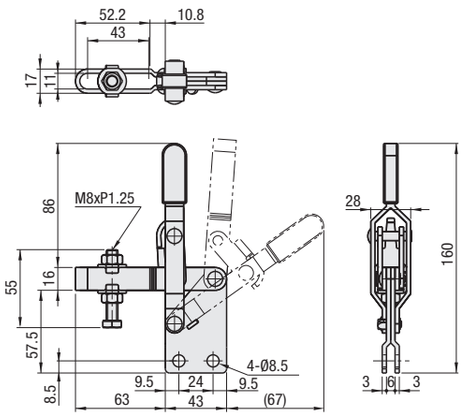

Hold Down, Vertical Handle (Straight Base)

(Clamped)

Part Number	MC04-9S
Body Material	SS400
Surface Treatment	Trivalent Chromate
Tightening Force (N)	1960
Weight (g)	420
Arm Open-Close Angle	110°
Handle Open-Close Angle	64°
Accessory	Steel Bolt
Unit Price	

MC04-9S

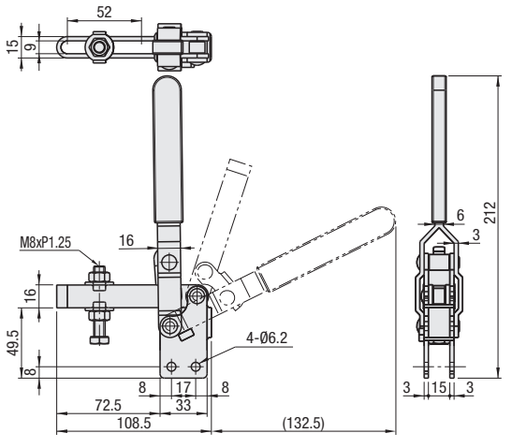

Ordering Example

Part Number
MC04-7S

Example

Combination of these app. examples can be selected on our website.
Selection Procedure Details P.87

e-Catalog Search Keyword #MA471 Search

* Enter the search keyword in the search box on e-Catalog. The search result will be shown in "Modular Assembler" area.

Toggle Clamps

Hold Down, Vertical Handle, Welded Tip (Straight Base) / High Arm Type (Flange Base)

Features: Welded Tip Type (MC04-10, MC04-11, MC04-12) allows a screw to be fixed at any desired position to be easily fit in fixture designs. High Arm Type (MC04H-2) is adjustable without spacers because it has an arm position 20mm higher compared to the conventional product (MC04-2).

1N=0.101972kgf

Hold Down, Vertical Handle, Welded Tip (Straight Base)

(Clamped)

Part Number	MC04-10
Body Material	SS400
Surface Treatment	Trivalent Chromate
Tightening Force (N)	1500
Weight (g)	430
Arm Open-Close Angle	130°
Handle Open-Close Angle	68°
Accessory	Steel Bolt
Unit Price	

MC04-10

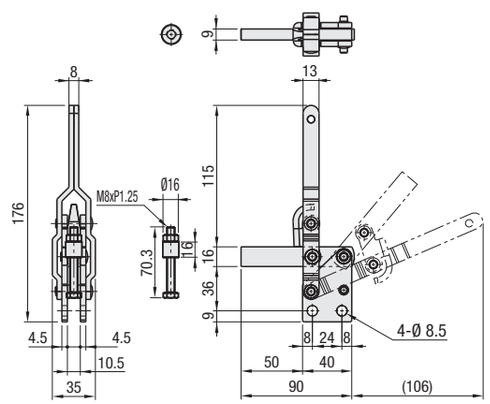

Hold Down, Vertical Handle, Welded Tip (Straight Base)

(Clamped)

Part Number	MC04-11
Body Material	SS400
Surface Treatment	Trivalent Chromate
Tightening Force (N)	3500
Weight (g)	960
Arm Open-Close Angle	160°
Handle Open-Close Angle	88°
Accessory	Steel Bolt
Unit Price	

MC04-11

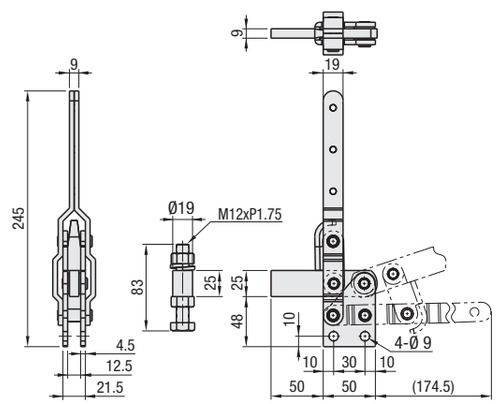

Hold Down, Vertical Handle, Welded Tip (Straight Base)

(Clamped)

Part Number	MC04-12
Body Material	SS400
Surface Treatment	Trivalent Chromate
Tightening Force (N)	4000
Weight (g)	1250
Arm Open-Close Angle	160°
Handle Open-Close Angle	88°
Accessory	Steel Bolt
Unit Price	

MC04-12

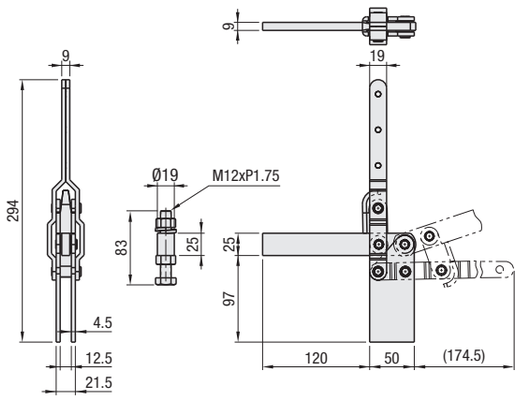

Hold Down, Vertical Handle, High Arm Type (Flange Base)

(Clamped)

Part Number	MC04H-2
Body Material	SS400
Surface Treatment	Trivalent Chromate
Tightening Force (N)	910
Weight (g)	170
Arm Open-Close Angle	95°
Handle Open-Close Angle	60°
Accessory	Bolt with Rubber Material: NBR Hardness: Shore A70
Unit Price	

MC04H-2

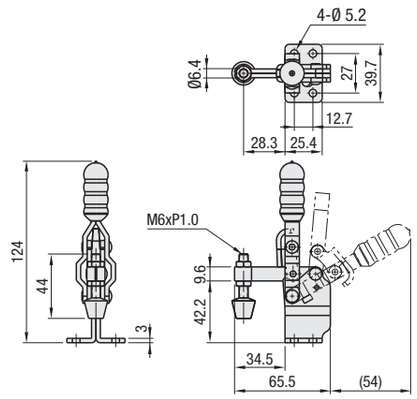

Ordering Example

Part Number
MC04-11
MC04H-2