MGFLL50 (θ=00-50)
MEFLL50 (θ=00-50)
(Economy type)

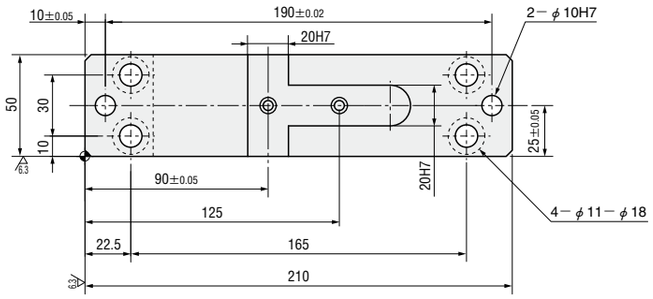

■Rear removal space

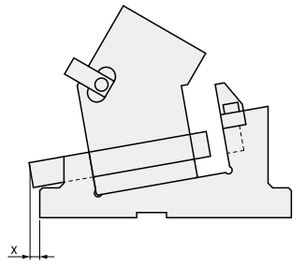

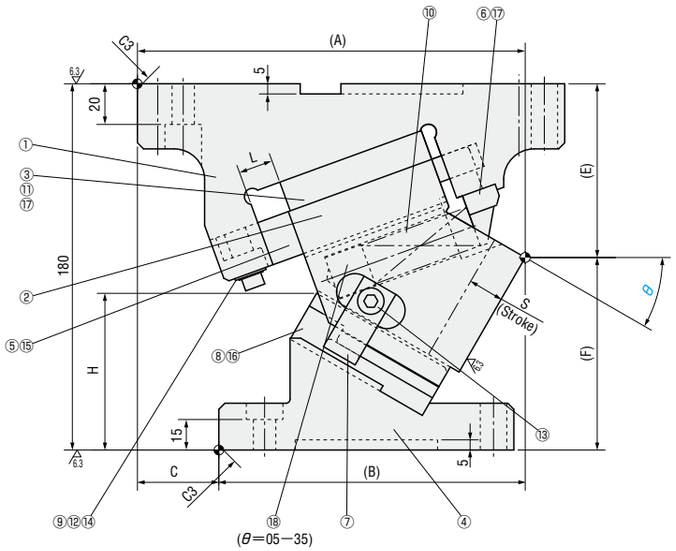

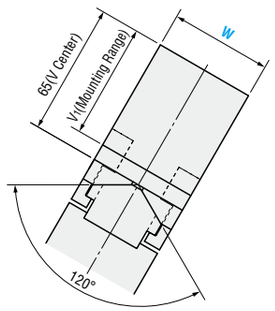

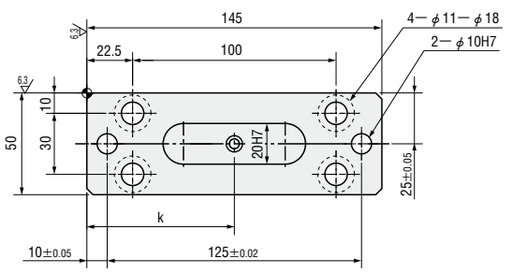

■Components table P.1287

W	θ	A	B	C	E	F	H	L	V_1	k	x
50	00	195	115	80	67.5	112.5	46	23.3	65	72.5	0
	05	198.04	123.04	75	68.29	111.71	52.4	22			
	10	195.99	130.99	65	69.77	110.23	58.6	20			
	15	198.77	133.77		71.95	108.05	64.5				
	20	196.34	141.34	55	74.79	105.21	70.1				
	25	191.62	150.62	41	80.28	99.72	73.3	18			
	30	190.58	150.58	40	85.39	94.61	77	16		62.5	
	35	187.15	162.15	25	90.1	89.9	81.3			72.5	
	40	183.29	160.79	22.5	95.35	84.65	85.1		55	62.5	
	45	179.94	169.94	10	98.13	81.87	91.4			72.5	
	50	174.07	169.07	5	99.37	80.63	99.2	15			

Slide Stroke S	Working force KN (tonf)		Spring load N (kgf)			Total weight kg	Catalog No.	W	θ
	Standard working force	Max. working force	Preload	5mm before bottom dead center	Max. load				
15.0	29.4 (3.0)	58.8 (6.0)	184(18.8)	792(80.7)	1098(111.9)	10.6	MGFLL MEFLL (Economy type)	50	00
15.6			180(18.3)	853(87.0)	1167(119.0)	10.3			05
15.6			269(27.5)	880(89.7)		9.9			10
17.0				902(92.0)		9.7			15
18.4				925(94.3)		9.4			20
18.0			359(36.6)	943(96.1)		9.4			25
17.4			263(26.8)	863(88.0)	1105(112.6)	9.2			30
18.9				884(90.1)		9.2			35
20.6				899(91.7)		9.1			40
22.5				921(93.9)		9.1			45
23.3			316(32.2)	936(95.5)		9.0			50

Order

Catalog No.	W	—	θ
MGFLL	50	—	35

Days to Ship Quotation

Price Quotation

Alterations

Catalog No.	W	—	θ	—	(N12・N13…etc.)
MGFLL	50	—	15	—	N12

Alterations	Code	Spec.
φ12H7 or φ13H7	N12	Change dowel hole diameter φ10H7 ⇨ φ12H7
	N13	Change dowel hole diameter φ10H7 ⇨ φ13H7
	K	Add 3 locating keys (With 3 hexagon socket head cap screws M8×15)
	KA	Add 3 stepped locating keys (With 3 hexagon socket head cap screws M8×15)